Primary Cavity Servo
2005/12/19

Feed Around Path

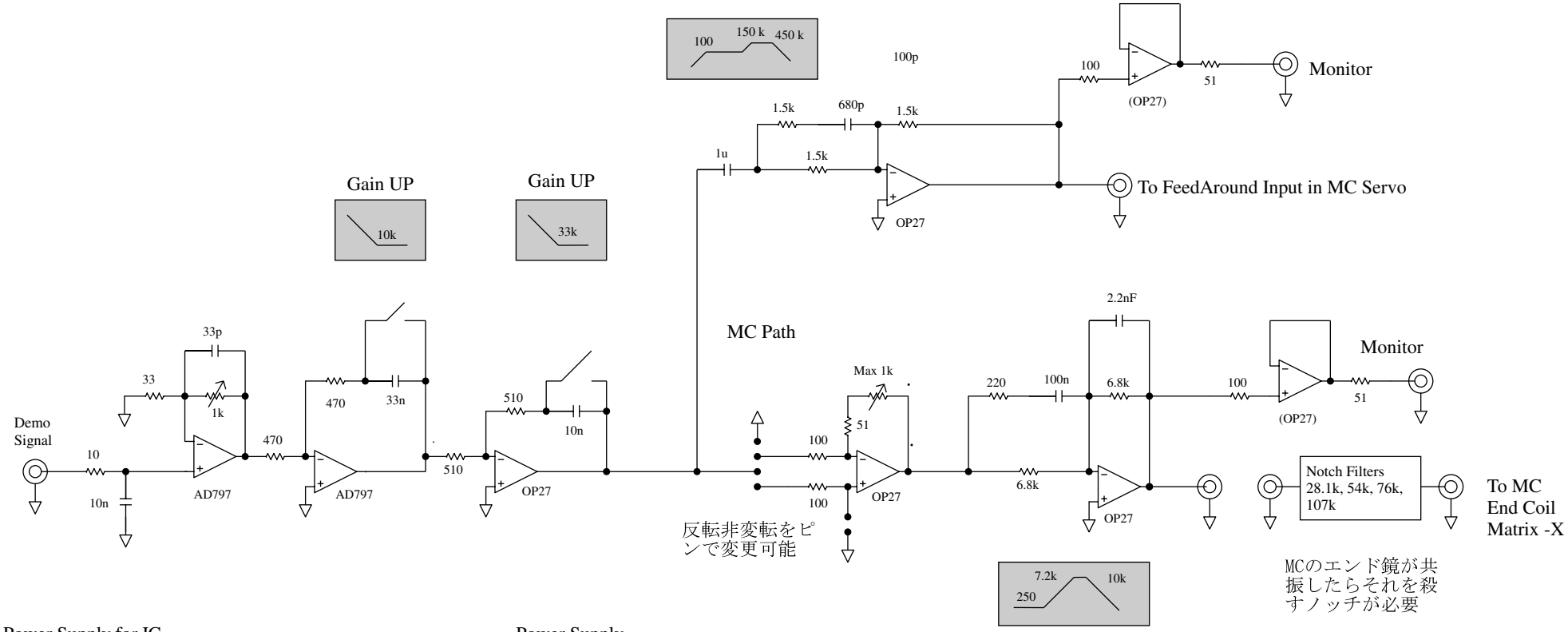

Power Supply for IC

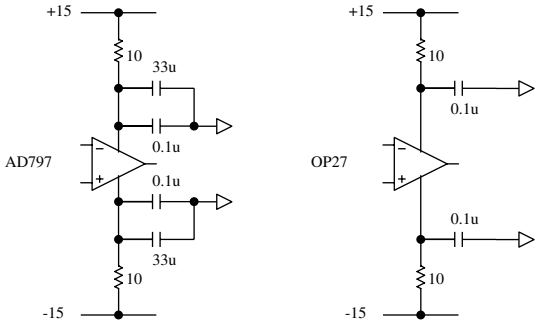
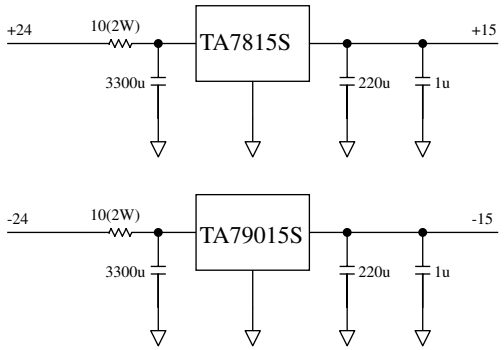
Power Supply